FSBS Flanged Double Nut

- FSBS Flanged Double Nut

Call: 01386 421 005
Email: sales@abssac.co.uk
Web: www.abssac.co.uk

ABSSAC
PRECISION MOTION SINCE 1982

Precision Ball Screws

Double Nut with Flange

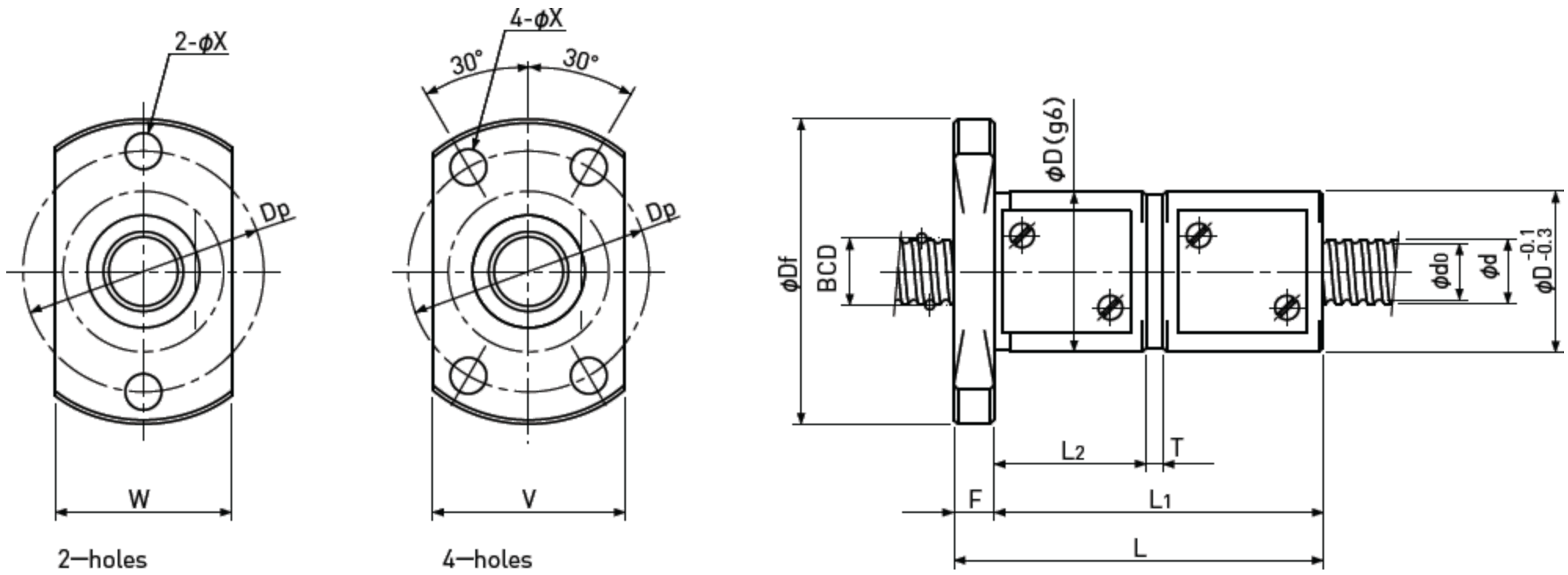

Unit : mm

Ball Nut Model number	Shaft nominal dia. d	Lead	Ball size	BCD	Lead angle	Root dia. d_0	Number of Circuit	Basic Load Rating N		Nut Rigidity N/μm
								Dynamic Ca	Static Coa	
FSBS 0602 A	6	2	1	6.2	5°52'	5.1	2.7×1	750	1200	114
FSBS 0602 B	6	2	1	6.2	5°52'	5.1	3.7×1	980	1600	155
FSBS 0602.5 A	6	2.5	1	6.2	7°19'	5.1	2.7×1	750	1200	115
FSBS 0802 A(1)	8	2	1	8.2	4°26'	7.1	2.7×1	850	1600	144
FSBS 0802 B(1)	8	2	1	8.2	4°26'	7.1	3.7×1	1100	2200	195
FSBS 0802 A(2)	8	2	1.5875	8.3	4°23'	6.6	2.7×1	1850	3000	162
FSBS 0802 B(2)	8	2	1.5875	8.3	4°23'	6.6	3.7×1	2400	4100	217
FSBS 0802.5 A	8	2.5	1.5875	8.3	5°29'	6.6	2.7×1	1850	3000	161
FSBS 0802.5 B	8	2.5	1.5875	8.3	5°29'	6.6	3.7×1	2400	4100	219
FSBS 0803 A	8	3	2	8.3	6°34'	6.2	2.7×1	2600	4200	167
FSBS 0803 B	8	3	2	8.3	6°34'	6.2	3.7×1	3500	5700	227

Ball Nut Model number	Nut dimension										
	D	Df	L	L_1	F	L_2	T	W	V	D_p	Bolt Hole X
FSBS 0602 A	15	29	35	31	4	13.5	2	17	18	23	3.4
FSBS 0602 B	15	29	41	37	4	17	2	17	18	23	3.4
FSBS 0602.5 A	15	29	35.5	31.5	4	13.5	2	17	18	23	3.4
FSBS 0802 A(1)	16	30	33	29	4	12.5	2	18	18	24	3.4
FSBS 0802 B(1)	16	30	41	37	4	17	2	18	18	24	3.4
FSBS 0802 A(2)	20	38	41	36	5	16.5	2	22	23	30	4.5
FSBS 0802 B(2)	20	38	46	41	5	19	2	22	23	30	4.5
FSBS 0802.5 A	20	38	45.5	40.5	5	18.5	2.5	22	23	30	4.5
FSBS 0802.5 B	20	38	51	46	5	21.5	2	22	23	30	4.5
FSBS 0803 A	20	38	49	44	5	20	2	22	23	30	4.5
FSBS 0803 B	20	38	56	51	5	23.5	2	22	23	30	4.5

Note 1) The diameter of one of the Screw Shaft ends must be less than the Screw Shaft Root diameter, otherwise Ball Nut cannot be installed.

Note 2) Ball Nut dimension is without seal at both ends.
If the seals are required, Ball Nut dimension should be changed, in that case, please ask ABSSAC.
Some type of Ball Nuts cannot equip with seals, please ask ABSSAC representative.

Note 3) Rigidity
The Rigidity values shown in the table are theoretical values calculated from the amount of Elastic Displacement under the Preload equivalent to 10% of the Basic Dynamic Load Rating Ca.

Note 4) All models are Right-hand screw. If Left-hand screw is required, please ask ABSSAC representative.

Precision Ball Screws

Double Nut with Flange

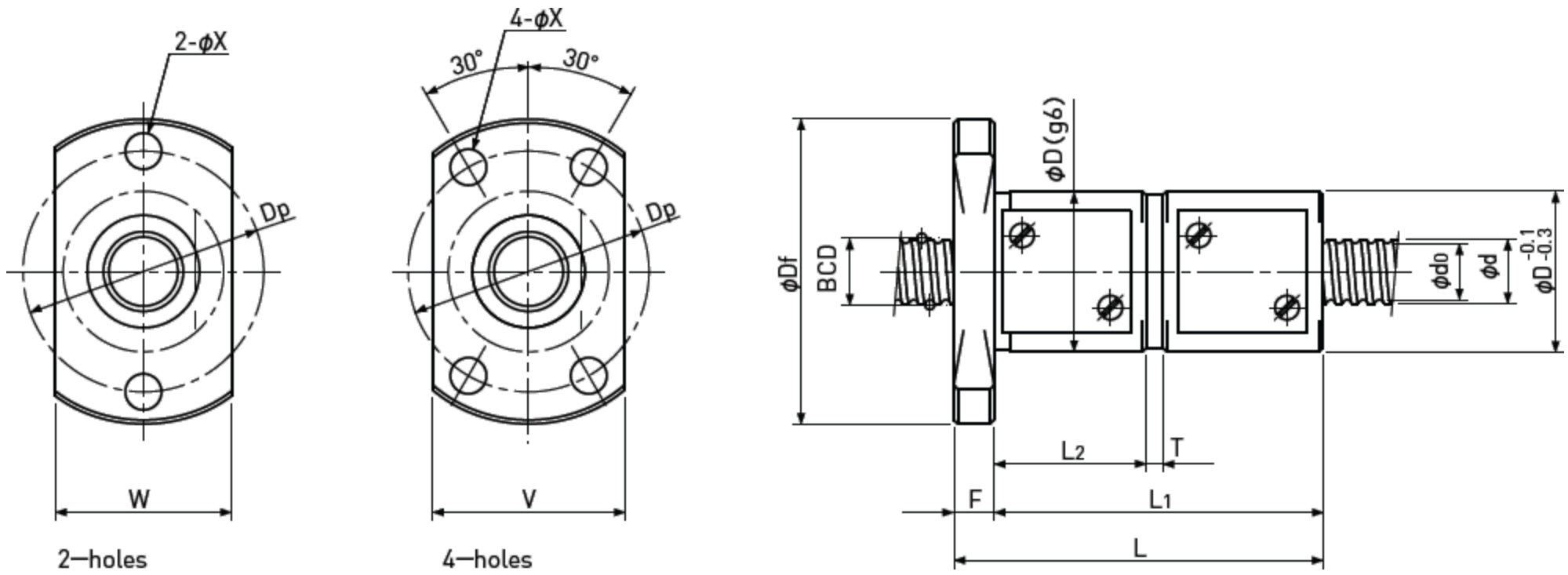

Unit : mm

Ball Nut Model number	Shaft nominal dia. d	Lead	Ball size	BCD	Lead angle	Root dia. d_0	Number of Circuit	Basic Load Rating N		Nut Rigidity N/μm
								Dynamic Ca	Static Coa	
FSBS 1002 A	10	2	1.5875	10.3	3°32'	8.6	2.7×1	2100	3800	196
FSBS 1002 B	10	2	1.5875	10.3	3°32'	8.6	3.7×1	2700	5300	262
FSBS 1002.5 A	10	2.5	1.5875	10.3	4°25'	8.6	2.7×1	2100	3800	196
FSBS 1002.5 B	10	2.5	1.5875	10.3	4°25'	8.6	3.7×1	2700	5300	262
FSBS 1003 A	10	3	2	10.3	5°18'	8.2	2.7×1	3000	5200	202
FSBS 1003 B	10	3	2	10.3	5°18'	8.2	3.7×1	3900	7200	275
FSBS 1004 A	10	4	2	10.3	7°03'	8.2	2.7×1	3000	5200	203
FSBS 1202 B	12	2	1.5875	12.3	2°58'	10.6	3.7×1	3000	6400	307
FSBS 1202.5 B	12	2.5	1.5875	12.3	3°42'	10.6	3.7×1	3000	6400	306
FSBS 1203 B	12	3	2	12.3	4°26'	10.2	3.7×1	4300	8700	318
FSBS 1204 B	12	4	2.381	12.3	5°55'	9.8	3.7×1	5400	10200	324

Ball Nut Model number	Nut dimension										
	D	Df	L	L_1	F	L_2	T	W	V	D_p	Bolt Hole X
FSBS 1002 A	23	41	41	36	5	16.5	2	25	25	33	4.5
FSBS 1002 B	23	41	46	41	5	19	2	25	25	33	4.5
FSBS 1002.5 A	24	44	46.5	40.5	6	18.5	2.5	26	27	35	5.5
FSBS 1002.5 B	24	44	52	46	6	21.5	2	26	27	35	5.5
FSBS 1003 A	24	44	50	44	6	20	2	26	27	35	5.5
FSBS 1003 B	24	44	57	51	6	23.5	2	26	27	35	5.5
FSBS 1004 A	24	44	57	51	6	23	2	26	27	35	5.5
FSBS 1202 B	25	45	49	43	6	19.5	3	27	27	36	5.5
FSBS 1202.5 B	26	46	52	46	6	21	3	28	28	37	5.5
FSBS 1203 B	28	48	60	54	6	24.5	3	30	30	39	5.5
FSBS 1204 B	28	48	69	63	6	28	3	30	30	39	5.5

Note 1) The diameter of one of the Screw Shaft ends must be less than the Screw Shaft Root diameter, otherwise Ball Nut cannot be installed.

Note 2) Ball Nut dimension is without seal at both ends.
If the seals are required, Ball Nut dimension should be changed, in that case, please ask ABSSAC.
Some type of Ball Nuts cannot equip with seals, please ask ABSSAC representative.

Note 3) Rigidity
The Rigidity values shown in the table are theoretical values calculated from the amount of Elastic Displacement under the Preload equivalent to 10% of the Basic Dynamic Load Rating Ca.

Note 4) All models are Right-hand screw. If Left-hand screw is required, please ask ABSSAC representative.

Precision Ball Screws

Double Nut with Flange

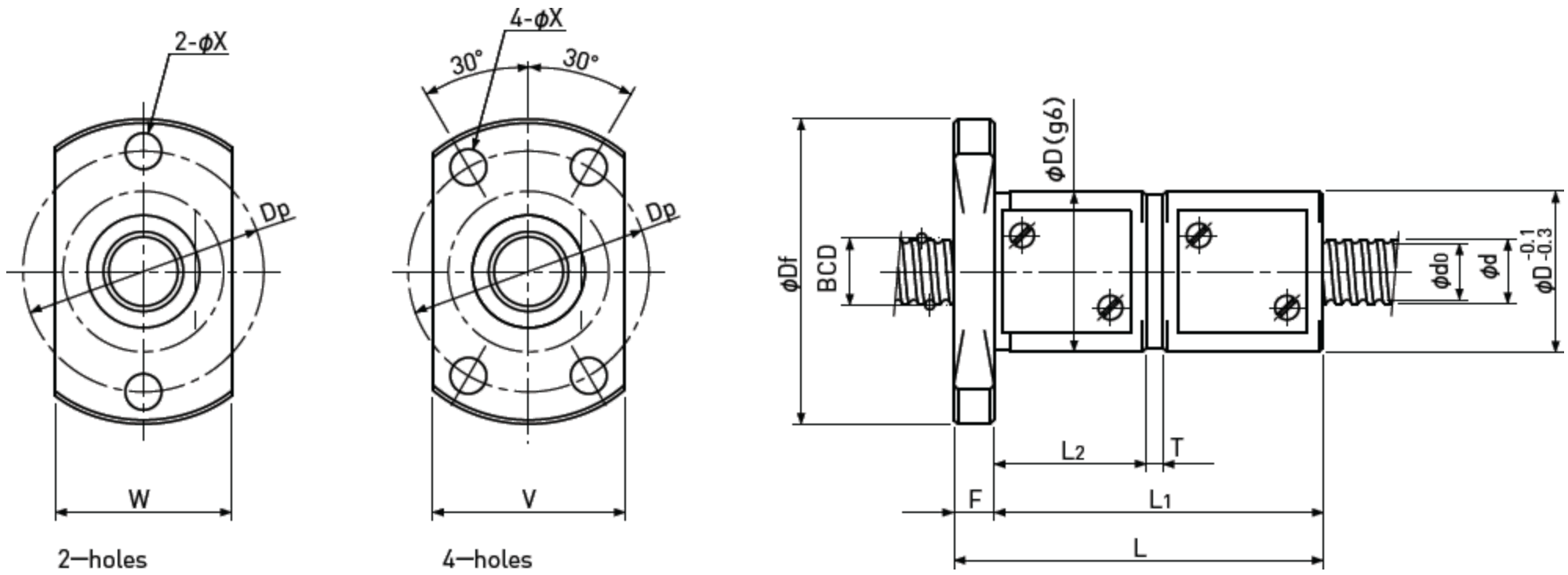

Unit : mm

Ball Nut Model number	Shaft nominal dia. d	Lead	Ball size	BCD	Lead angle	Root dia. d_0	Number of Circuit	Basic Load Rating N		Nut Rigidity N/μm
								Dynamic Ca	Static Coa	
FSBS 1402 B	14	2	1.5875	14.3	2°33'	12.6	3.7×1	3200	7500	345
FSBS 1402.5 B	14	2.5	1.5875	14.3	3°11'	12.6	3.7×1	3200	7500	345
FSBS 1403 B	14	3	2	14.3	3°49'	12.2	3.7×1	4600	10100	361
FSBS 1404 B	14	4	2.381	14.3	5°05'	11.8	3.7×1	5700	11600	366
FSBS 1405 B	14	5	2.381	14.3	6°21'	11.8	3.7×1	5700	11600	365
FSBS 1602 B	16	2	1.5875	16.3	2°14'	14.6	3.7×1	3400	8600	386
FSBS 1602.5 B	16	2.5	1.5875	16.3	2°48'	14.6	3.7×1	3400	8600	385
FSBS 1603 B	16	3	2	16.3	3°21'	14.2	3.7×1	4900	11600	401
FSBS 1604 B	16	4	2.381	16.3	4°28'	13.8	3.7×1	6200	13600	409
FSBS 1605 B	16	5	3.175	16.5	5°31'	13.2	3.7×1	9100	18200	425

Ball Nut Model number	Nut dimension										
	D	Df	L	L_1	F	L_2	T	W	V	D_p	Bolt Hole X
FSBS 1402 B	26	46	49	43	6	19.5	3	28	28	37	5.5
FSBS 1402.5 B	28	48	52	46	6	21	3	30	30	39	5.5
FSBS 1403 B	30	51	60	54	6	24.5	3	32	32	42	5.5
FSBS 1404 B	30	51	69	63	6	28	3	32	32	42	5.5
FSBS 1405 B	30	51	79	73	6	32.5	3	32	32	42	5.5
FSBS 1602 B	28	48	49	43	6	19.5	3	30	30	39	5.5
FSBS 1602.5 B	28	48	52	46	6	21	3	30	30	39	5.5
FSBS 1603 B	32	53	60	54	6	24.5	3	34	34	44	5.5
FSBS 1604 B	34	54	70	64	6	28	4	36	36	45	5.5
FSBS 1605 B	38	57	87	81	6	37.5	4	40	40	48	5.5

Note 1) The diameter of one of the Screw Shaft ends must be less than the Screw Shaft Root diameter, otherwise Ball Nut cannot be installed.

Note 2) Ball Nut dimension is without seal at both ends.
If the seals are required, Ball Nut dimension should be changed, in that case, please ask ABSSAC.
Some type of Ball Nuts cannot equip with seals, please ask ABSSAC representative.

Note 3) Rigidity
The Rigidity values shown in the table are theoretical values calculated from the amount of Elastic Displacement under the Preload equivalent to 10% of the Basic Dynamic Load Rating Ca.

Note 4) All models are Right-hand screw. If Left-hand screw is required, please ask ABSSAC representative.